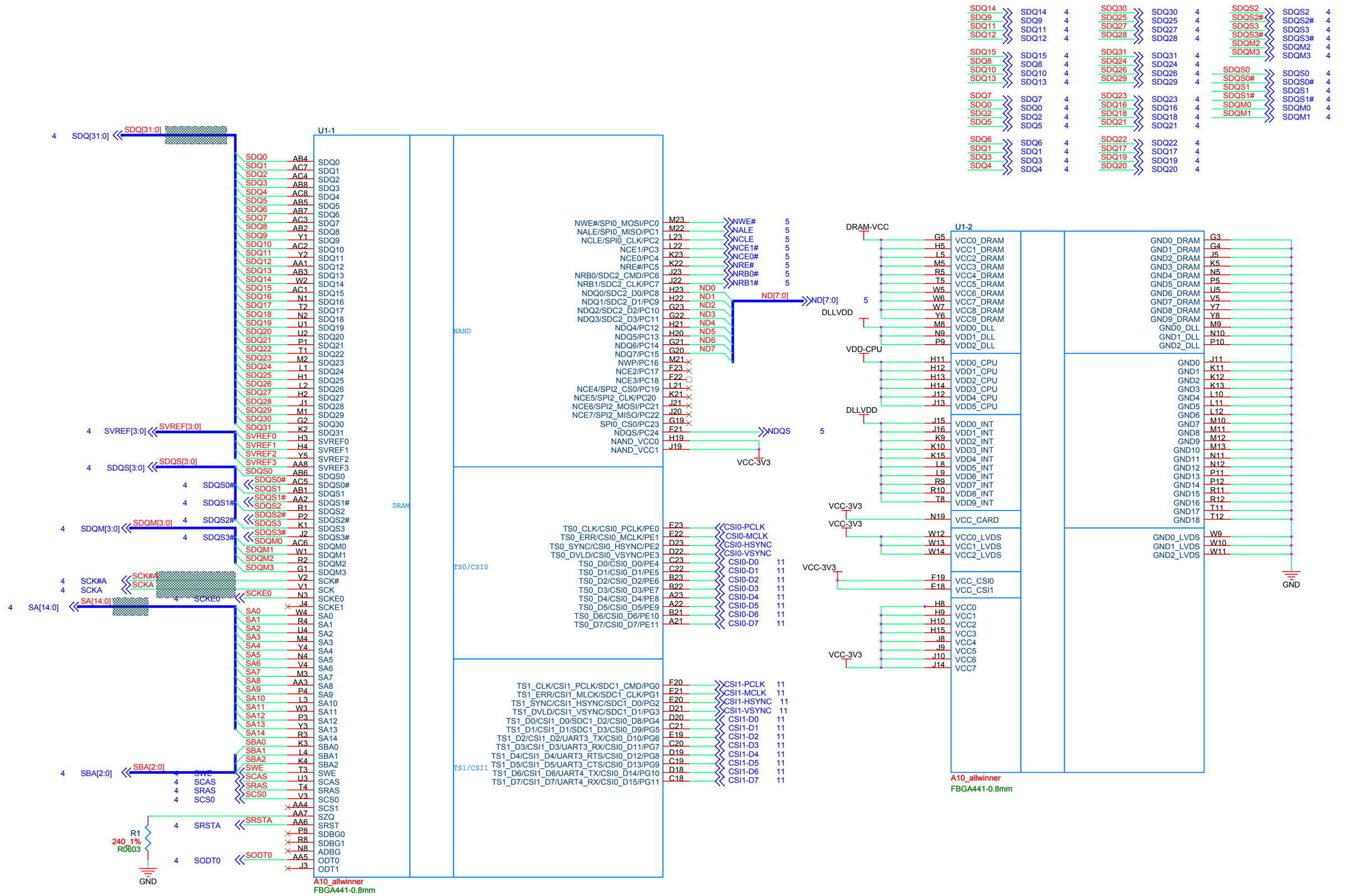

Title
A10-cubieboard-2012-08-08

Size	Document Number	Rev
A3	<Doc>	V1.0

Date: Sheet 1 of 11

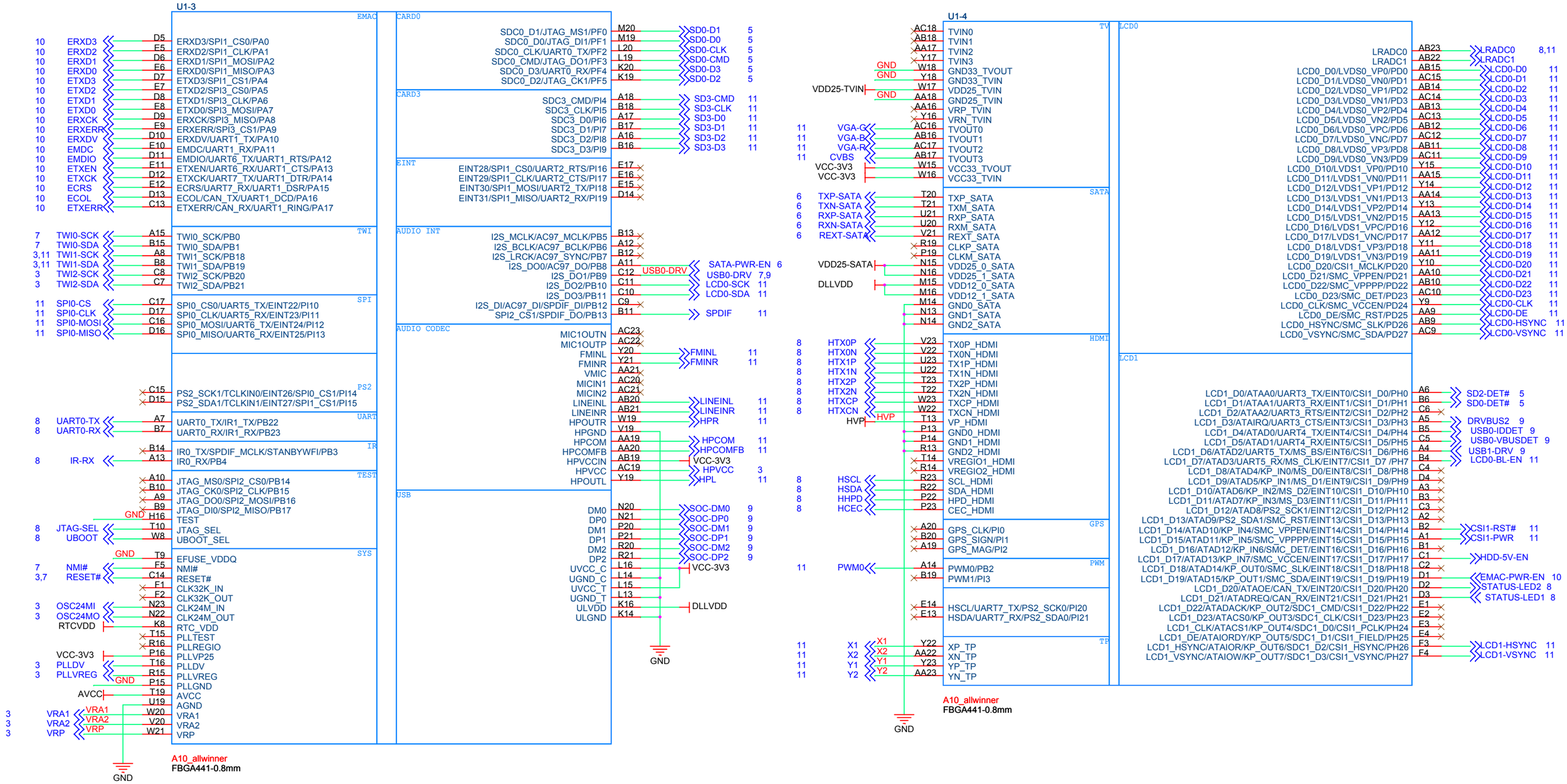

Title	A10-cubieboard-2012-08-08
Size A3	Document Number <Doc>
Rev	V1.0
Date:	Sheet 2 of 11

DDR3

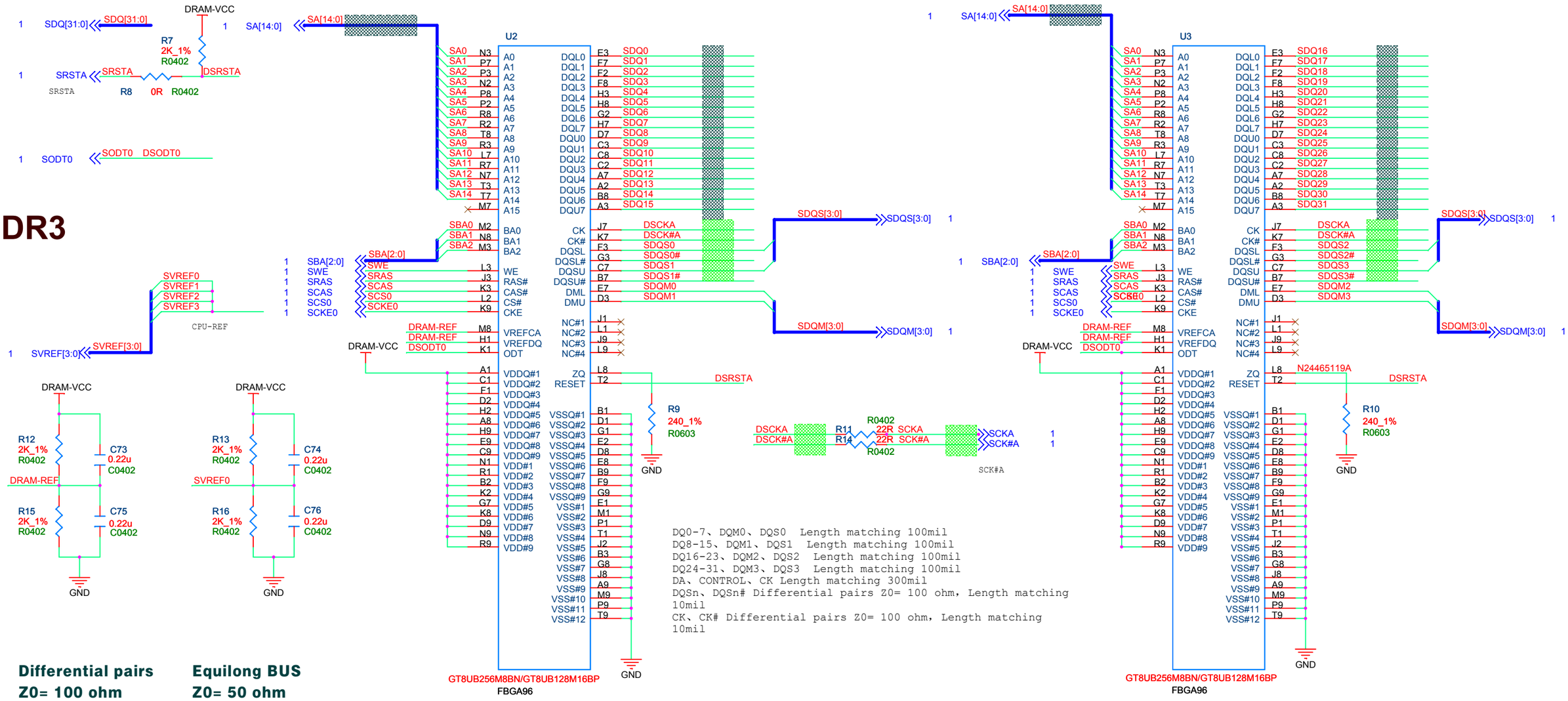

Title	A10-cubieboard-2012-08-08
Size A3	Document Number <Doc>
Rev	V1.0
Date:	Sheet 4 of 11

CARD0

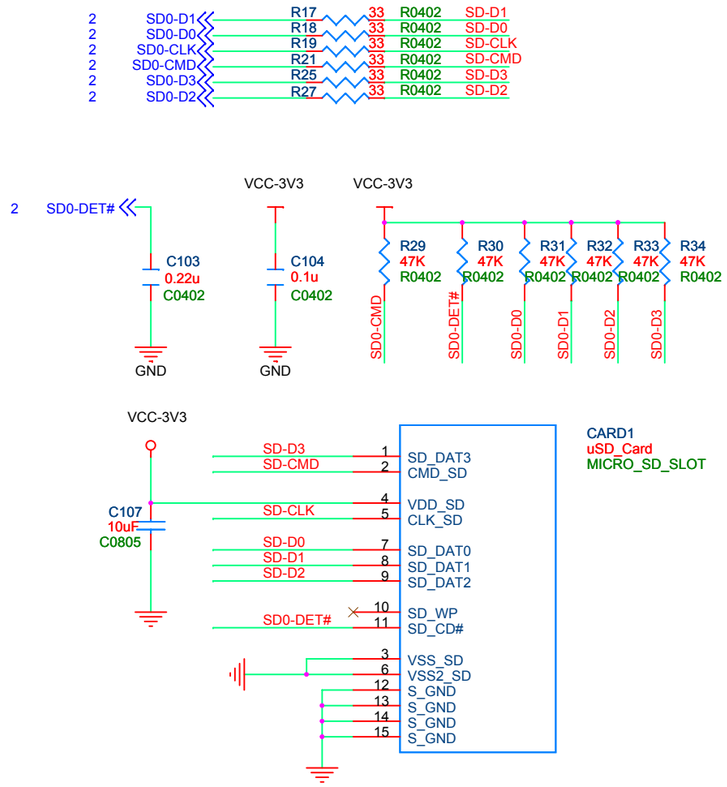

CARD2 (option with NAND flash)

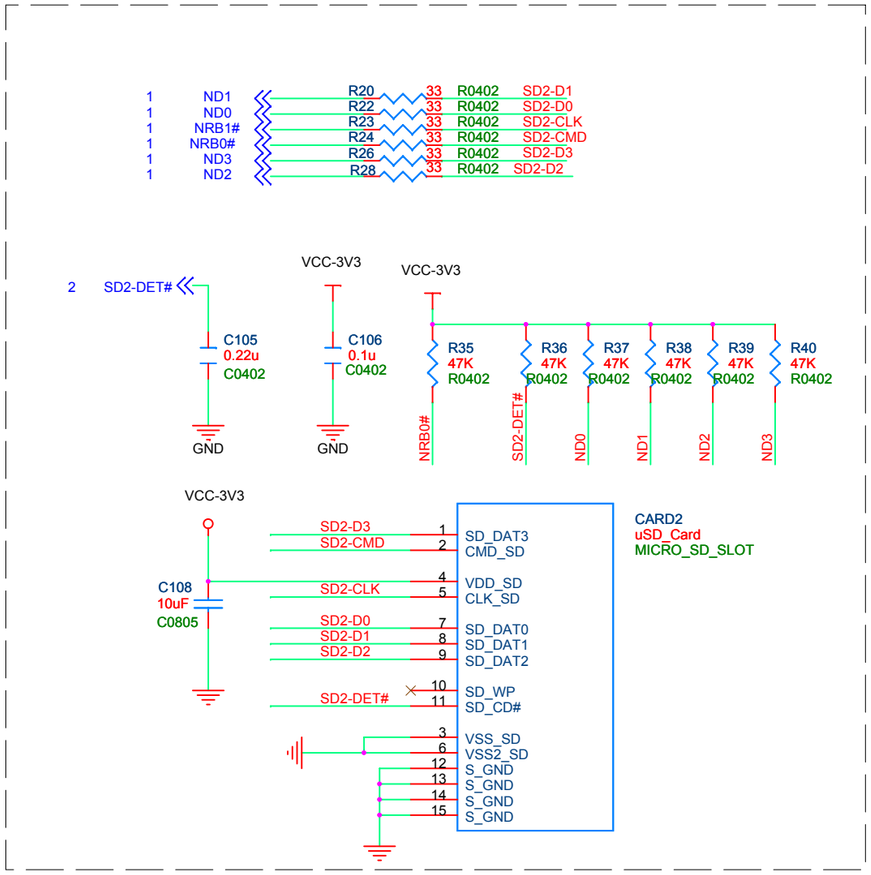

NAND flash

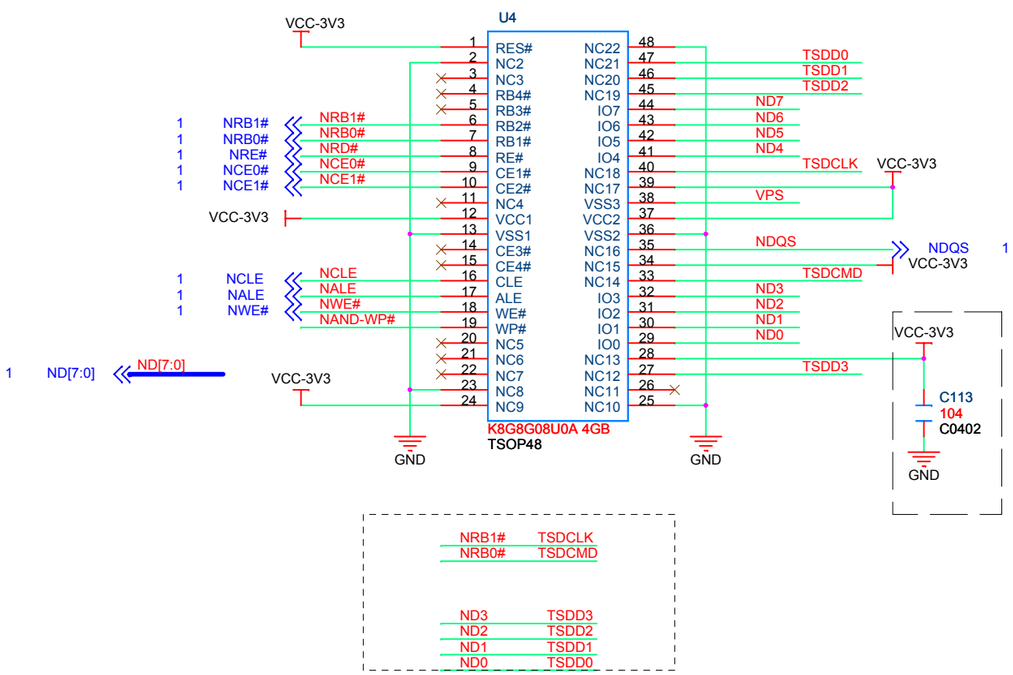

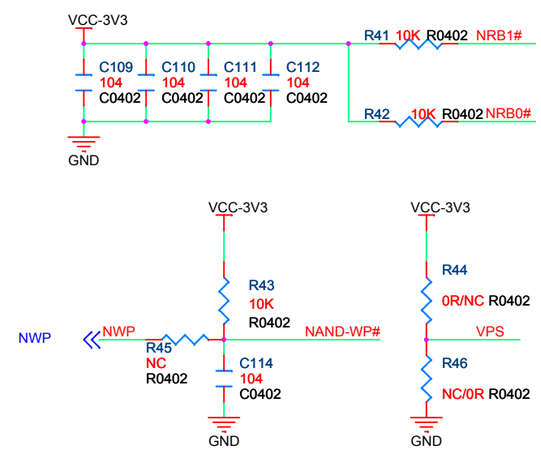

Title	A10-cubieboard-2012-08-08	
Size A3	Document Number <Doc>	Rev V1.0
Date:	Sheet 5 of 11	

SATA

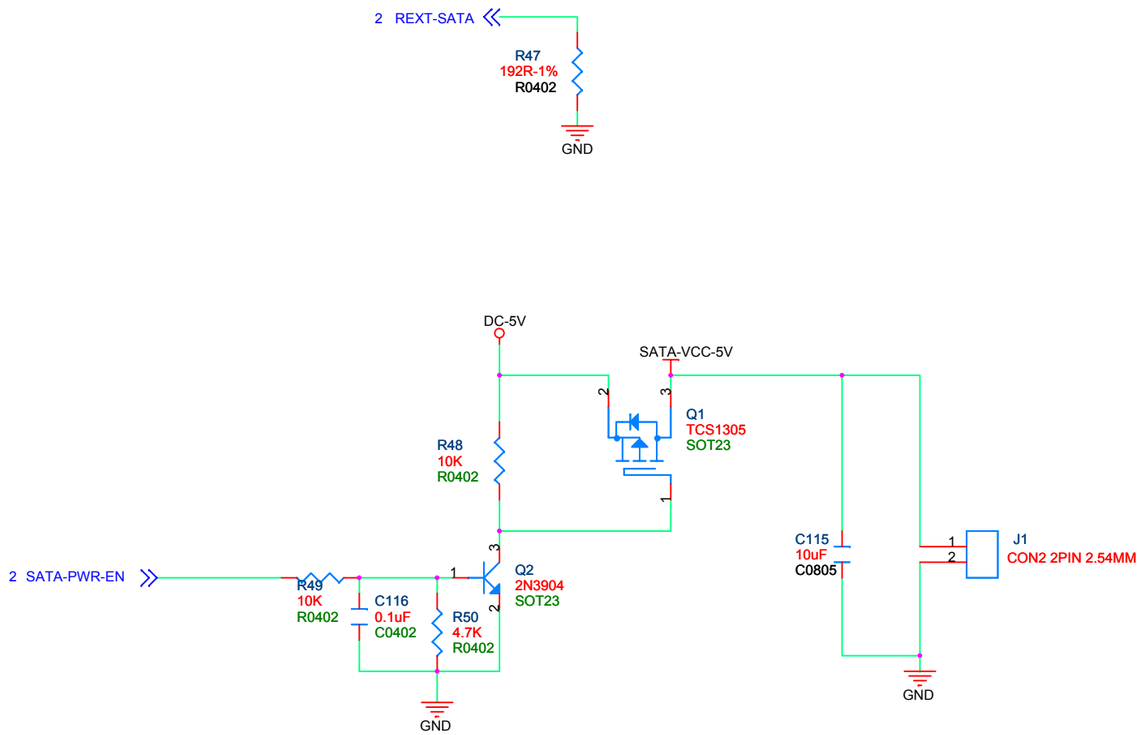

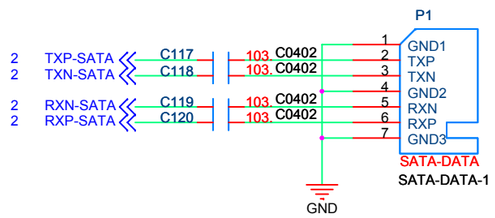

Title	A10-cubieboard-2012-08-08	
Size A3	Document Number <Doc>	Rev V1.0
Date:	Sheet 6 of 11	

DC-IN & DC-DC

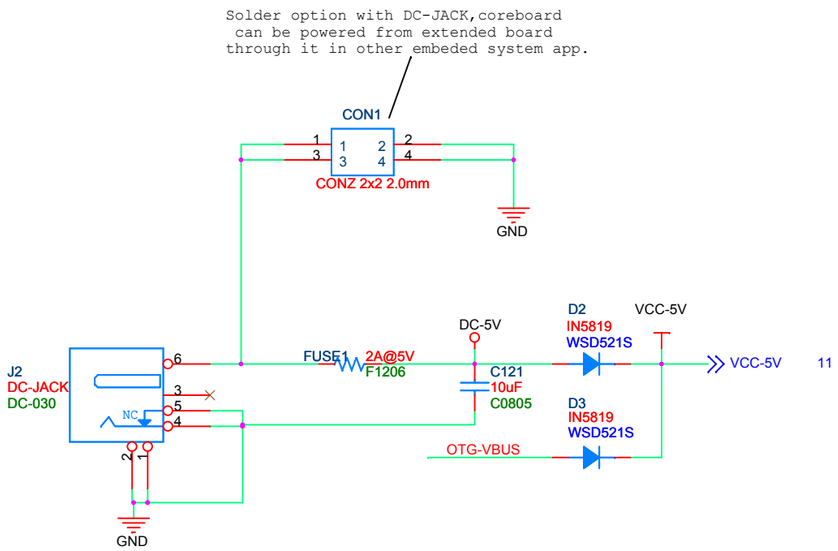

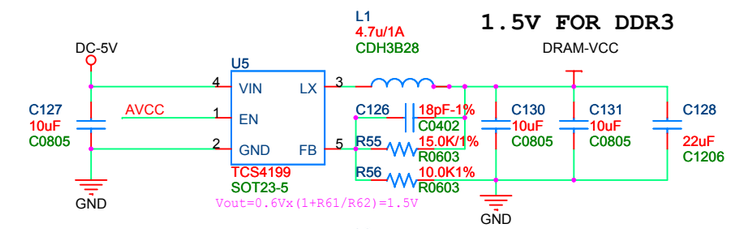

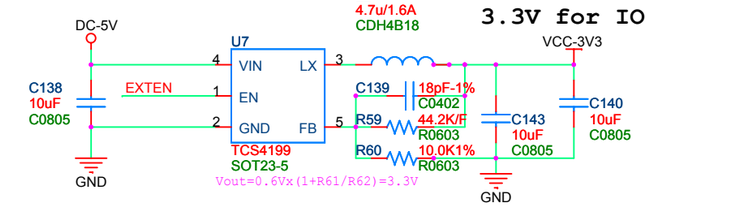

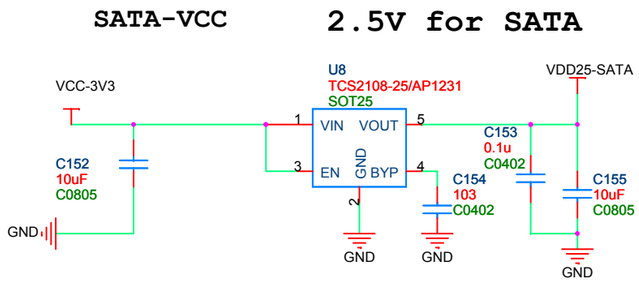

PMU

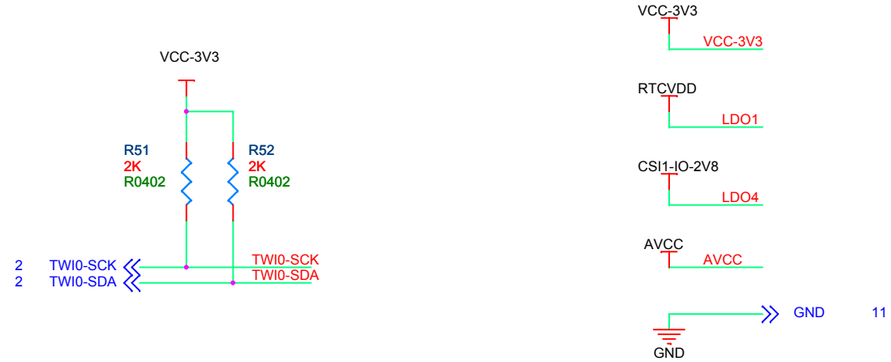

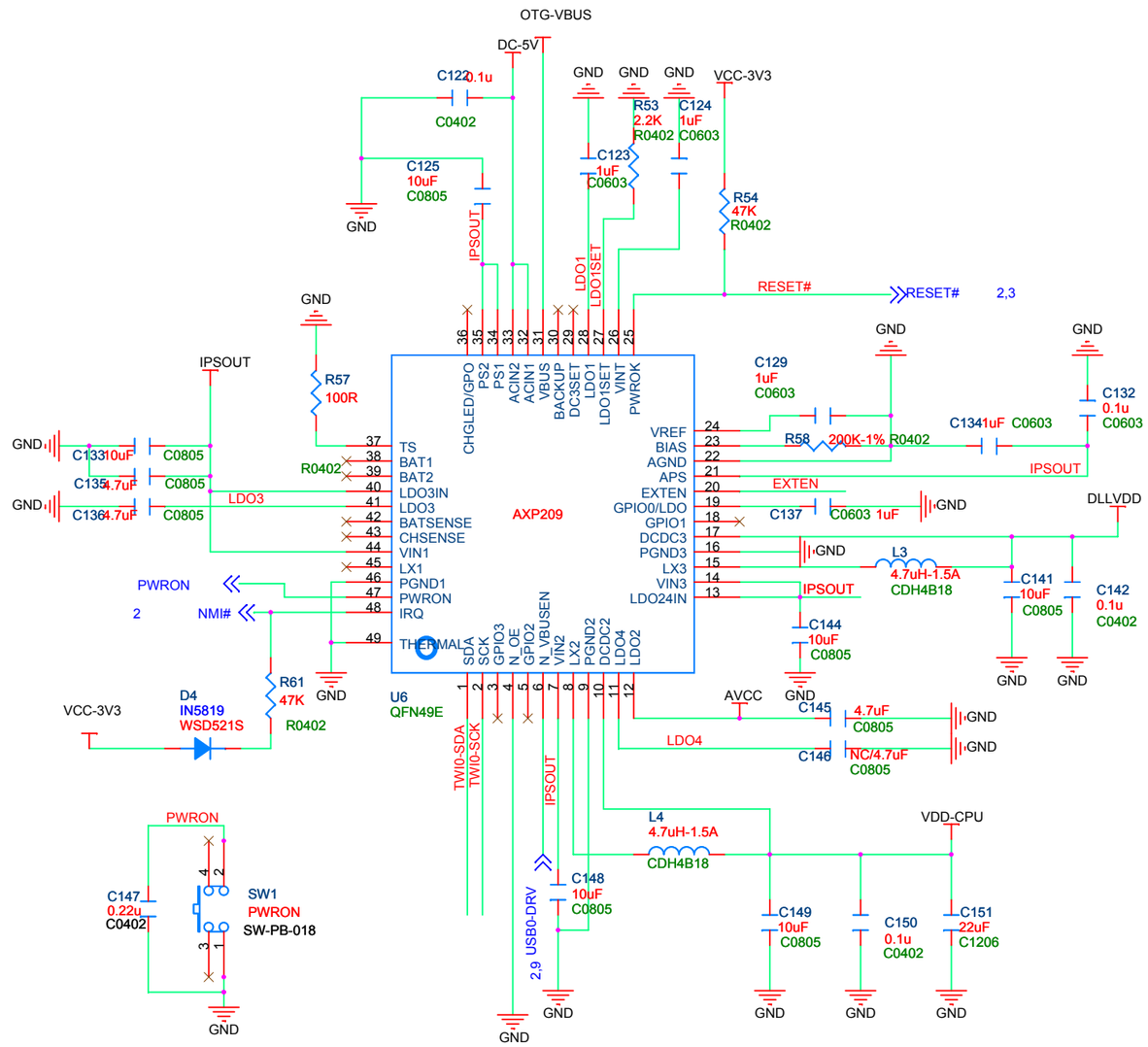

Title	A10-cubieboard-2012-08-08	
Size A3	Document Number <Doc>	Rev V1.0
Date:	Sheet 7 of 11	

HDMI

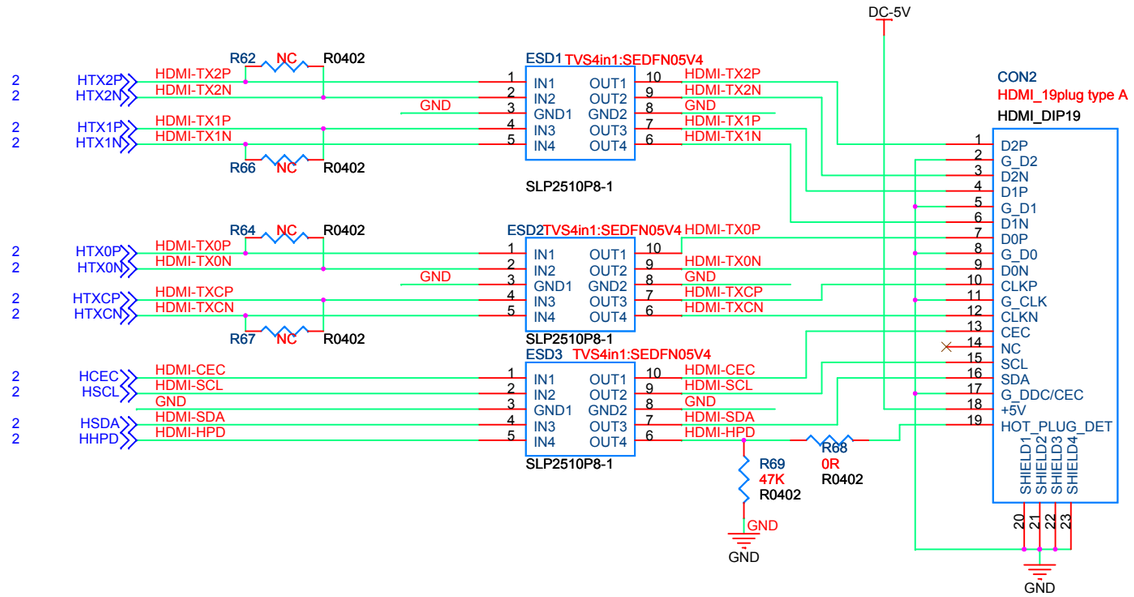

LEDs

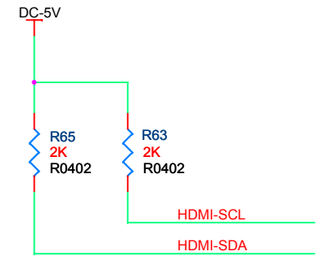

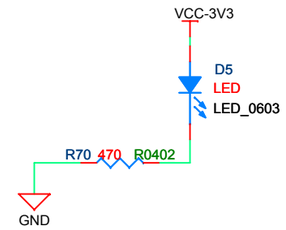

POWER LED

IR MODULE

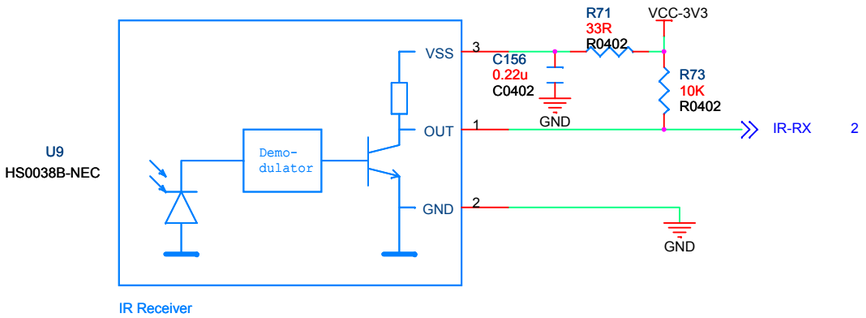

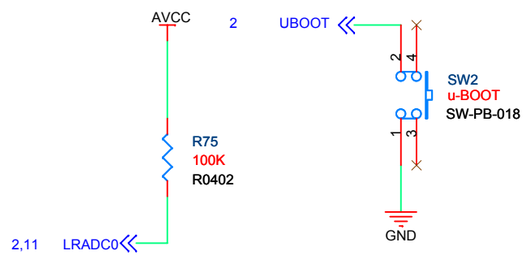

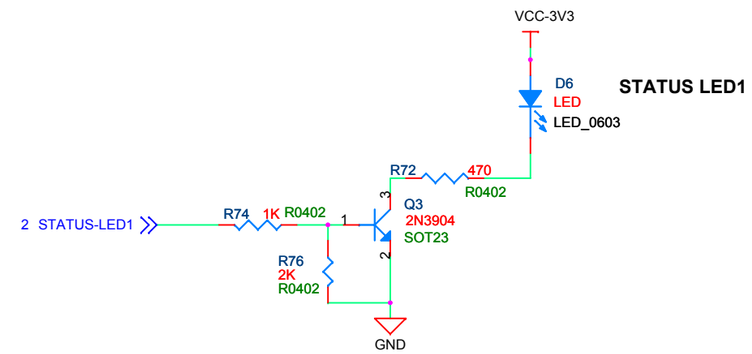

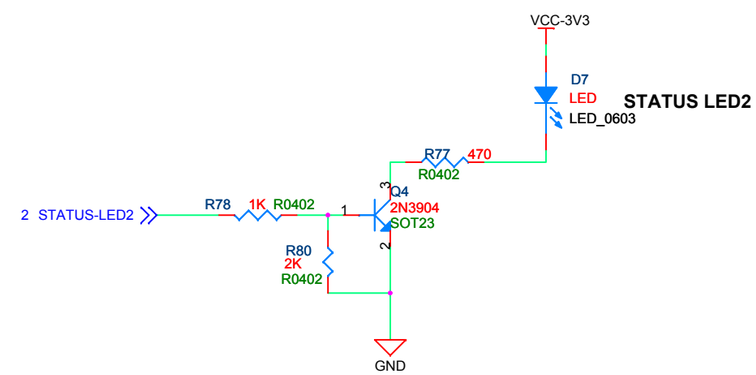

DEBUG

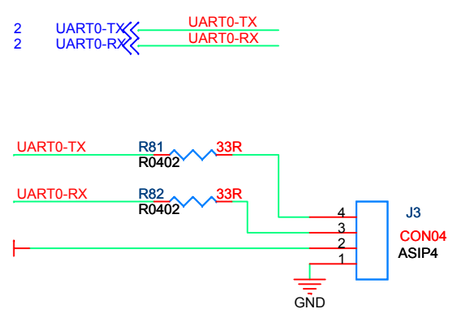

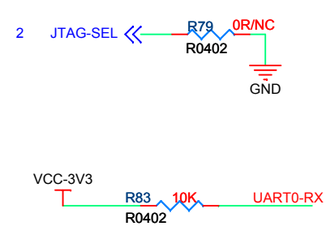

Title	A10-cubieboard-2012-08-08	
Size A3	Document Number <Doc>	Rev V1.0
Date:	Sheet 8 of 11	

USB HOST x 2

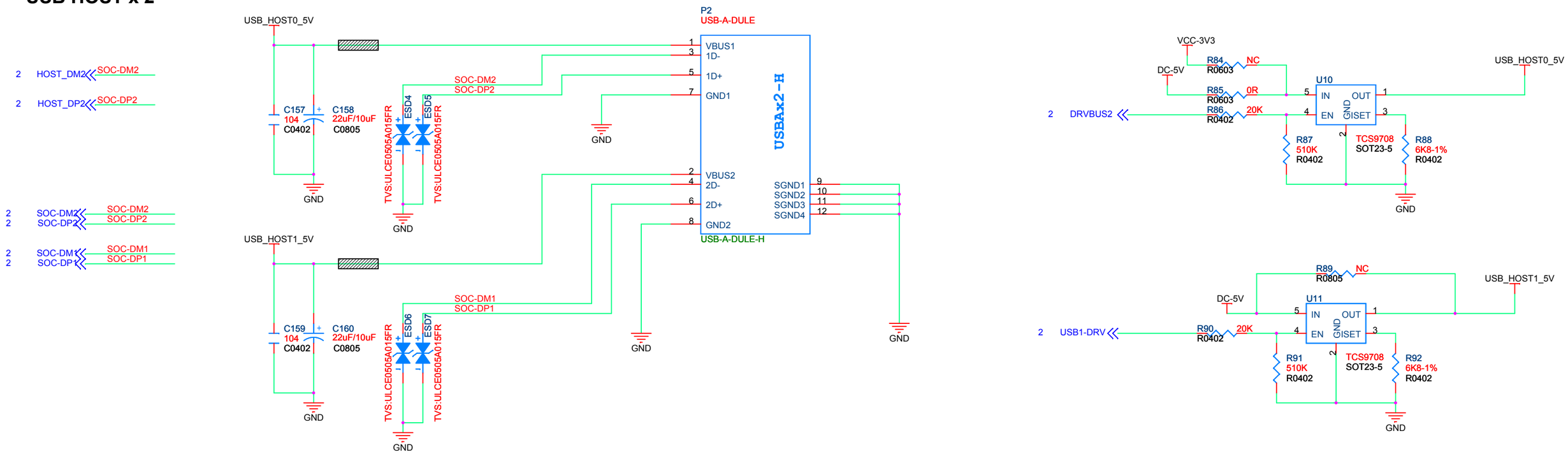

OTG

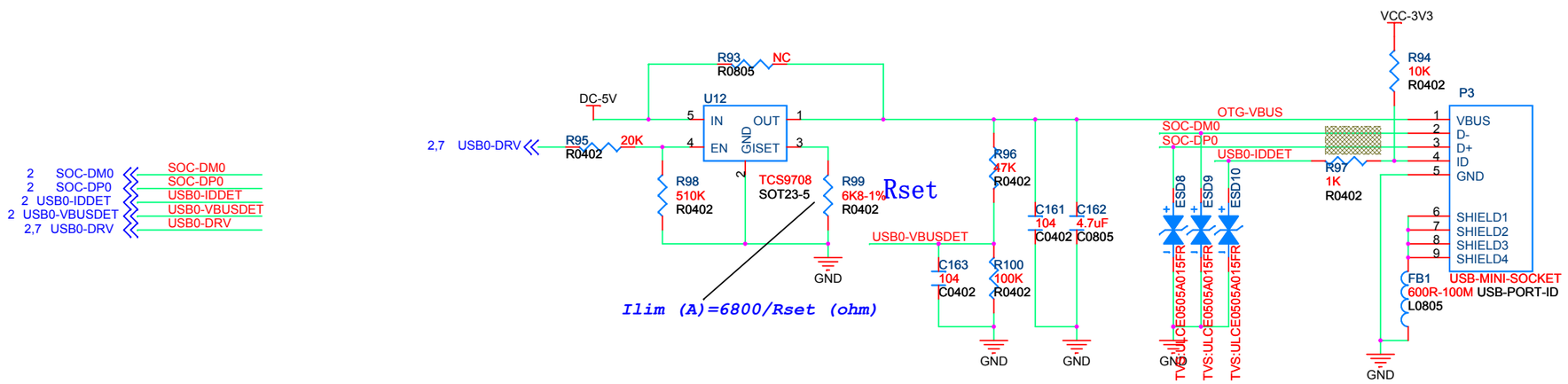

Title	A10-cubieboard-2012-08-08	
Size A3	Document Number <Doc>	Rev V1.0
Date:	Sheet 9 of 11	

EMAC

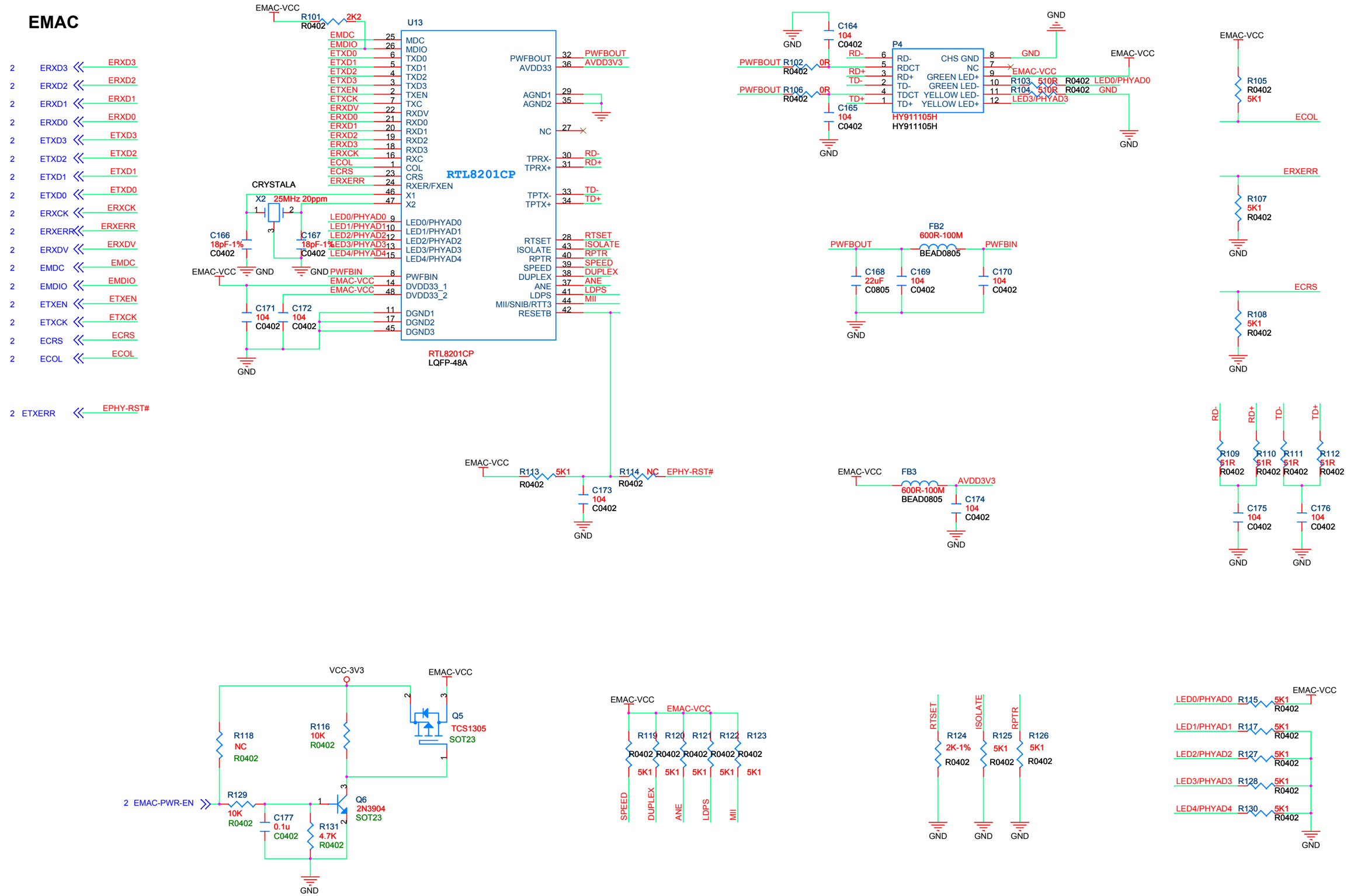

Title	A10-cubieboard-2012-08-08
Size A3	Document Number <Doc>
Rev	V1.0
Date:	Sheet 10 of 11

Extention interface

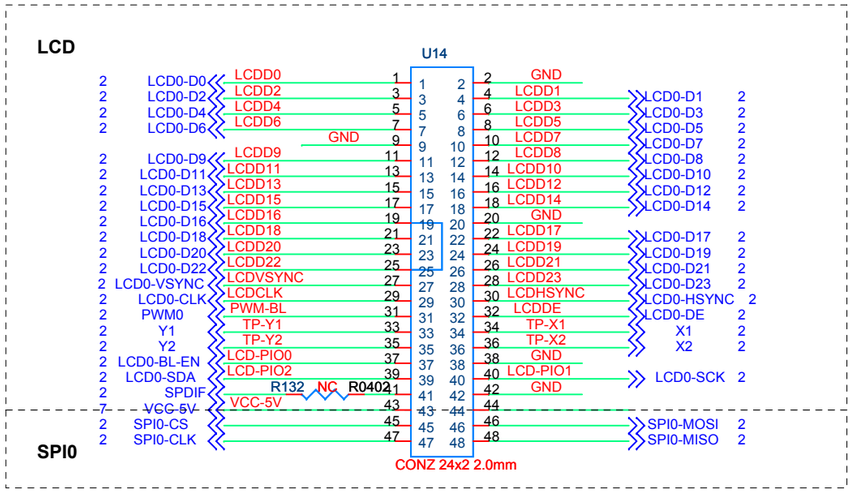

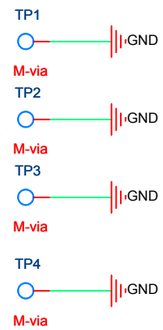

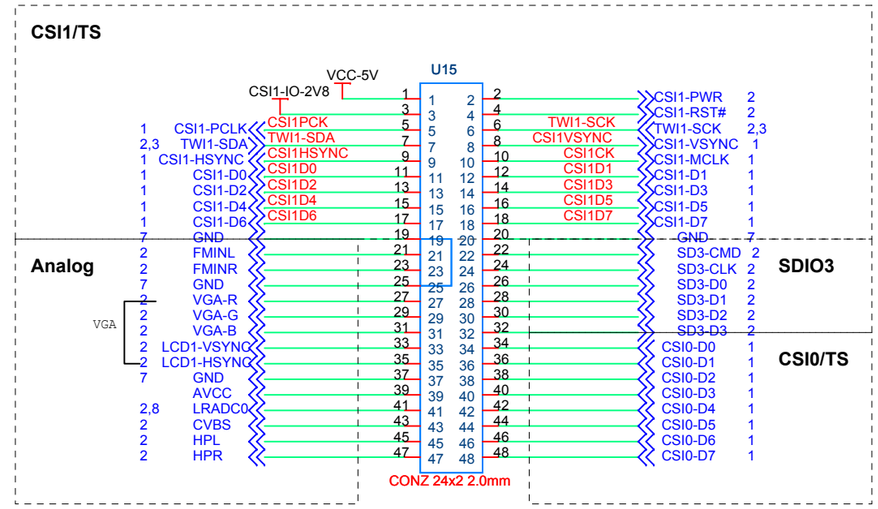

Line-In

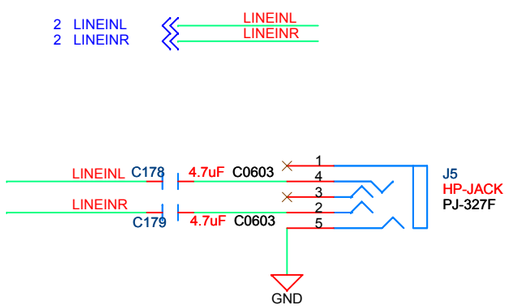

Head Phone & Speaker

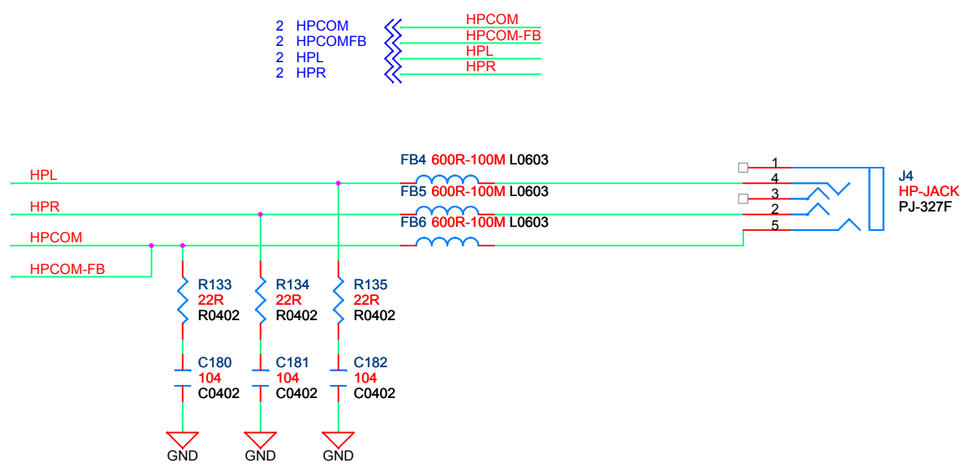

Title	A10-cubieboard-2012-08-08	
Size A3	Document Number <Doc>	Rev V1.0
Date:	Sheet 11 of 11	

CubieBoard 96 Extended Pins Definition

U14			
PIN	DEF	PIN	DEF
48	PI13	47	PI11
46	PI12	45	PI10
44	3.3V	43	VCC-5V
42	GND	41	PB13
40	PB10	39	PB11
38	GND	37	PH7
36	XN-TP	35	YN-TP
34	XP-TP	33	YP-TP
32	PD25	31	PB2
30	PD26	29	PD24
28	PD23	27	PD27
26	PD21	25	PD22
24	PD19	23	PD20
22	PD17	21	PD18
20	GND	19	PD16
18	PD14	17	PD15
16	PD12	15	PD13
14	PD10	13	PD11
12	PD8	11	PD9
10	PD7	9	GND
8	PD5	7	PD6
6	PD3	5	PD4
4	PD1	3	PD2
2	GND	1	PD0

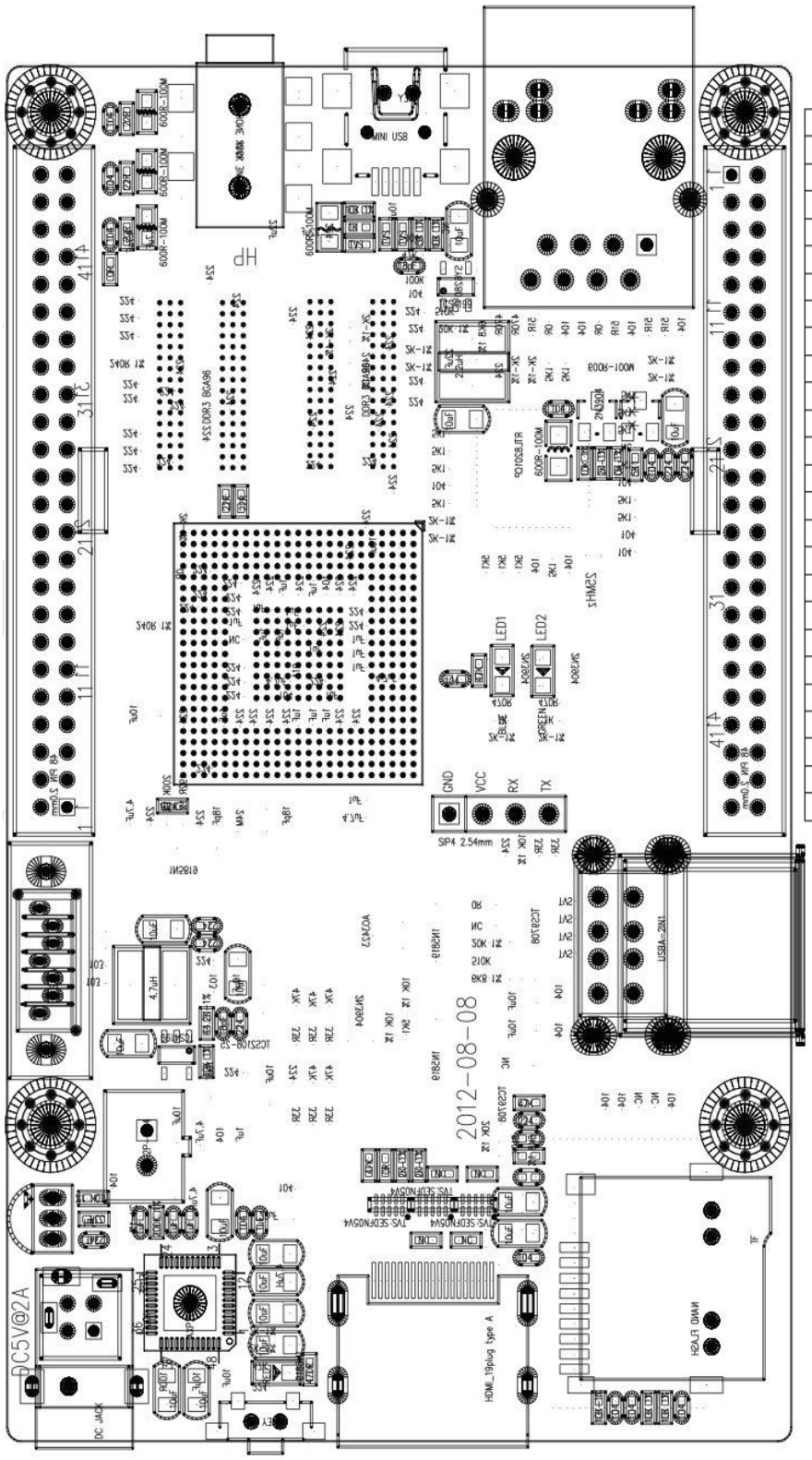

U15			
PIN	DEF	PIN	DEF
1	VCC-5V	2	PH15
3	CSI1-2V8	4	PH14
5	PG0	6	PB18
7	PB19	8	PG3
9	PG2	10	PG1
11	PG4	12	PG5
13	PG6	14	PG7
15	PG8	16	PG9
17	PG10	18	PG11
19	GND	20	GND
21	FMINL	22	PI4
23	FMINR	24	PI5
25	GND	26	PI6
27	VGA-R	28	PI7
29	VGA-G	30	PI8
31	VGA-B	32	PI9
33	LCD1-VSYNC	34	PE4
35	LCD1-HSYNC	36	PE5
37	GND	38	PE6
39	AVCC	40	PE7
41	LRADC0	42	PE8
43	CVBS	44	PE9
45	HPL	46	PE10
47	HPR	48	PE11

Thanks for cubieplayer's nice indication method!

TOP

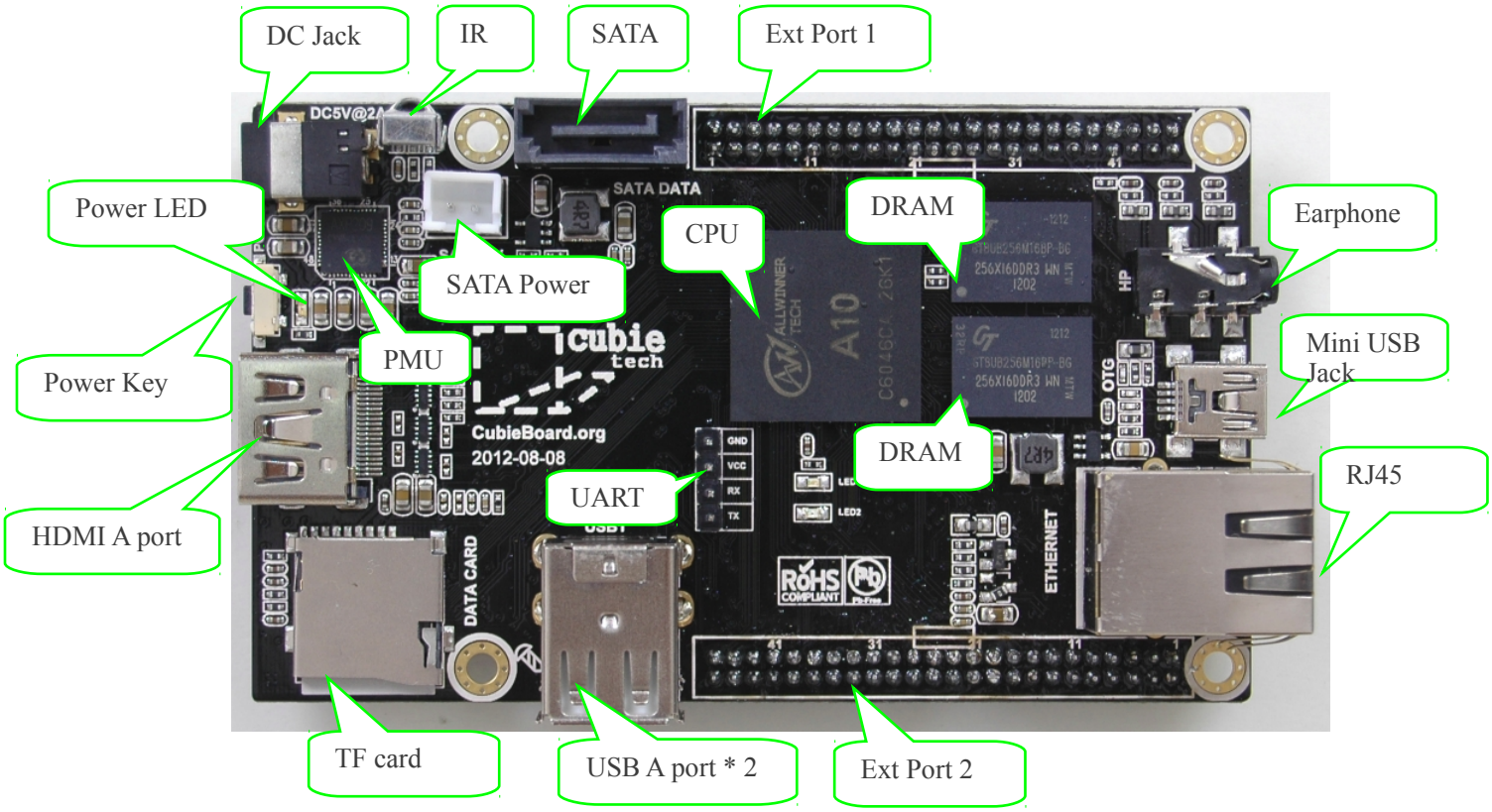
DC Jack
IR
SATA
Ext Port 1
Power LED
SATA Power
CPU
DRAM
Earphone
Power Key
PMU
Mini USB Jack
DRAM
RJ45
HDMI A port
UART
TF card
USB A port * 2
Ext Port 2

BOTTOM

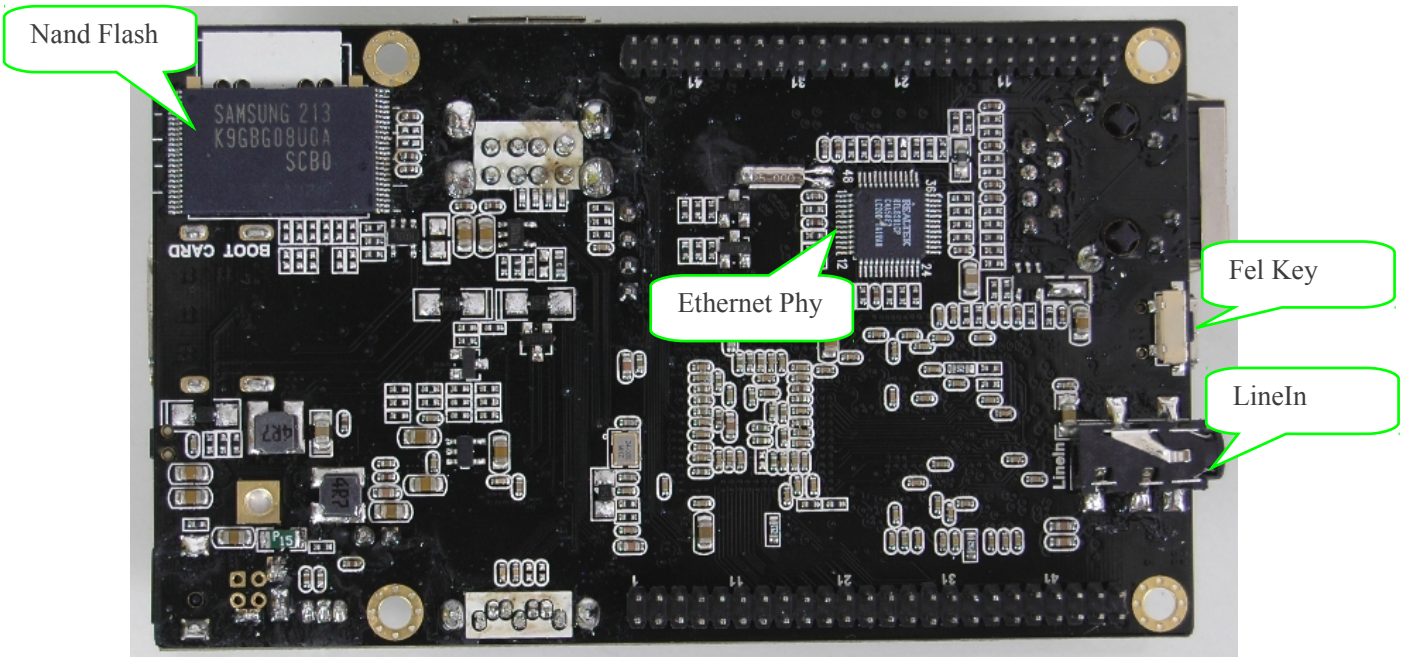
Nand Flash
Ethernet Phy
Fel Key
LineIn